POST 1970

AGGREGATE HOPPERS

By *JAMES KINKAID*

FREIGHT CARS Journal

FREIGHT CARS JOURNAL

Issue 53 Vol.10 No. 4 April 1993

Editors: David G. Casdorph, Eric A. Neubauer

SUBSCRIPTION INFORMATION

Subscription/membership for four (4) issues (not per year): $20.00 (USA). $22.00 (Canada). $35.00 (Other Countries). $50.00 (Institutions). Please make checks payable to *Freight Cars Journal.* Send dues/ subscriptions to: *Freight Cars Journal* P.O. Box 2480, Monrovia, CA 91017. Published by the Society of Freight Car Historians.

COPYRIGHT © 1993: Society of Freight Car Historians. ISSN 0742-9355. All rights reserved.

NOTICE

Whilst every effort is made to ensure the accuracy of the information and data forming the content of this publication, the authors, editors, and publishers cannot be held reponsible for errors or ommision, or for any loss or damage occasioned by any person using the information contained in this publication. The opinions expressed by the contributors are their own and do not necessarily reflect the views of the editors, publisher or other members of the Society.

CHANGES OF ADDRESS

All changes of address must include both the old and new address. Address changes must be sent to each of the Society's publications separately. Members and subscribers must notify our office of any change in address at least four weeks in advance. Failure of notification may result in addtional charges for return postage and re-mailing fees.

Domestic Claims for nonreceipt should be made within 90 days of the month of publication, overseas claims within 180 days. Thereafter, the regular back issue rate will be charged for replacement.

Freight Cars Journal is published for the Society by AG PRESS, Manhattan, KS. Printed in the United States of America.

FCJ CHANGE OF FORMAT NOTICE

Beginning with FCJ #45, *Freight Cars Journal* changed its format from a magazine to a serial book. The main differences being each issue comprises a single or group of related subjects under a different title for each issue. This also changes the proper bibliographic citation. The appropriate bibliographic citation for this issue is as follows:

Kinkaid, James. Post 1970 Aggregate Hoppers. Freight Cars Journal №53. Monrovia, CA:Society of Freight Car Historians, 1993. 20 pp.

ZIP CODE

Please note that contrary to the popular belief that the +4 digits are always the same as the box number (or last four whichever is applicable),that this is NOT true with our address here at *Freight Cars Journal.* Yes, our box number is 2480 and our +4 code is 6480.

TABLE OF CONTENTS

2
Post 1970 Aggregate Hoppers: Background and descriptions

6
Aggregate Hopper Roster

7
Cars rebuilt with Kits from Johnstown America

7
Dispositions Roster

8
Photo Album

16
Drawings

ACKNOWLEDGMENTS

Many fine folks were most helpful in the preparation of this article, so I would like to list them in alphabetical order if I may:

Howard Ameling, photographs
Craig Bossler, photographs
Dave Casdorph, photographs
Roberta Flurry, c/o RailTex Inc., fleet information
Eric Neubauer, roster help
Mike Ross, c/o The Delray Connecting Railway Company, fleet information
Michael Sagebiel, c/o ITG Inc., fleet information
Michael P. Siska Jr., c/o Johnstown America Corporation, photographs
Von Spears, c/o Dolese, fleet information
Mark Zuercher, c/o HELM Financial Corporation, photographs and fleet information.

I do thank each of you for your help - it was invaluable!!

POST 1970 AGGREGATE HOPPERS

by James Kinkaid
roster by Eric Neubauer & James Kinkaid
drawings by James Kinkaid

Aggregate. . .a big name for a small item: rock. Aggregate actually refers to gravel and rock of various types and sizes, but may also include sand, ``lava rock'' and the like. Basically any homogenous self clearing material used in the construction trades would qualify as aggregate. Although aggregate is in itself a pretty cheap material, due to the quantities involved, and the distances that it must usually be moved, aggregate haulage is big business, big enough to justify it's own line item in the annual AAR and railroad year end car loading and revenue reports.

Today, most aggregate is moved in three car types: HK, HM and HTS. While gondolas were used extensively at one time, and still are used somewhat, (witness the large Georgetown Railroad gondola fleet that is in rock service in Texas), the greatest bulk of this commodity is moved via the hopper. We have chosen to concentrate this article on the modern, (post 1970) twin hopper, AAR class HM. While I would imagine that most people associate gravel movement with the railroad ballast business, (AAR class HK), there is still a lot of aggregate moved via the rails in non-ballast operations. So, out of the two types of hoppers left, we will limit our discussion to the HM type. HTS class cars, while almost exclusively in aggregate service, are unique enough that they are well known and instantly recognized by almost everybody. (*Mainline Modeler* did an article and drawings of one style of the Ortner Rapid Discharge® car in the February 88 issue). So, we would like to present this sampler of post-1970 built aggregate hoppers for you.

DISTINCTIONS

Aggregate twin hoppers differ from their coal carrying cousins of mostly years past in several important ways. First of all, even though the later coal twins and the modern aggregate twins are of approximately the same cubical capacity, the modern rock hopper is always of at least 100 ton capacity, contrasting of course to the 55 or 70 ton capacity coal twins. This is due to several factors. First, the aggregate cars are much newer, which allows them to take advantage of better materials, clearances and sometimes, track structure. The other factor is due to the fact that in order to get 100 tons of coal into a hopper, the car had to be so long that three bays are required, or so tall that clearance problems arose. Since aggregate is considerably denser than coal, (coal weighs in the neighborhood of 50-54 lbs. per cubic foot, while pea gravel weighs about 95 lbs. per cubic foot), 100 tons of aggregate will fit into a twin hopper quite nicely. Another distinction to be made is that no aggregate twin that I'm aware of has an ``offset'' sidesheet, such as was pretty common on the coal twins. For one thing, the coal twins used this offset largely to gain more cubic capacity within the same clearance profile. This was due to the desire to maximize the amount of coal that could be carried per car. Because aggregate will fit without such measures, this has ceased to be of any importance. Looking at the Trinity drawings and the photographs, it can readily be seen that the side sheets are indeed offset, or waffled, between the side sheet posts. Instead of trying to gain cubic capacity however, this feature was included for quite another reason: strength. By introducing a bend, or curve, into the side sheet material, the strength factor rises by a large factor, with no weight penalty and only a modest investment in tooling requirements. In any case, the cubic volume to be gained by this technique would be minimal, as the offset is only about one inch or so. Another distinction to be made is with the hardware aspect of these aggregate cars. All aggregate cars have roller bearing trucks. Although this is of course due to the newer ages of these cars, I would imagine that since they are in a high cycle, high load scenario, roller bearings would have been mandated anyway.

Another distinction between the aggregate cars and the coal twins is the brake gearing systems. Many of the aggregate cars that we have located and observed have the empty-load feature. This system senses whether or not the car is loaded, and compensates, or varies the braking pressures accordingly. The service that these aggregate cars are in is of course ideal for the brake designers: maximum loads, or empty. The last distinction to be made between the aggregate and the coal twins is not so quite as nicely defined. While nearly all coal twins were of a riveted construction, this is not always true of the aggregate twins. The vast majority of the aggregate cars are welded, but there are at least two groups of cars that are not. We will discuss these differences later. These two groups aside, all of the

rest of the aggregate cars are of the welded design. This is probably due to several factors. Newer steels have a greater weldability than in the past. Also, the use of welding allows for the employment of jigs to accurately position the car parts prior to the fabrication processes. And there may also be a labor reduction involved, especially if computer controlled welding is employed.

And lastly, the aggregate cars are not subject to the same environmental factors that the coal twins were, (and still are). With ordinary rock and sand, there is little to fear from corrosion, whereas coal produces quite a corrosive process, especially when it gets wet. (The article in the January 1991 issue of *Railmodel Journal*, by Jim Eager, gives a prime example of this problem. In that article, he described how the NYC had numerous 3-bay coal hoppers manufactured by welding, only to have problems later when the corrosion had become so severe that car side sheet replacement had become necessary. While car side replacement is fairly common, especially with coal cars, the welded design introduced nearly fatal problems into the process). So, the "average" aggregate hopper of today is a two bay, 2000-2300 cuft., 100 ton capacity, all welded design, employing a sophisticated braking system, in captive service.

DETAILS

GREENVILLE STEEL CAR

Taking a look at the roster, it can readily be seen that the majority of the car orders were to the Greenville Steel Car Company, in Greenville, PA. In many ways, the GSC design is the most interesting, at least to me. One of the things that I was struck with was the fact that Greenville was apparently most comfortable with the metal forming operations. Looking at the car, an abundance of formed and pressed items stands out. Several items are particularly interesting. If one takes a close look at he hopper slope sheets, it becomes obvious as to how GSC "dished" the sheet by forming the edges into a rolled surface. This does several things: it eliminates several pieces of steel angle that would ordinarily be needed to tie in the slope sheet to the car sides and center partition. Also, just as was described above, by introducing a compound or curved surface into the flat material, the strength is greatly increased. And finally, by rolling the edges instead of using 90 degree angles, fatigue cracking would probably be considerably reduced, although this problem can also exist with a curved surface too.

Another area to take a closer look at are the ladder upright supports. If you look closely at the end view through the ladder, you will notice that the far upright has been folded flat near the top, so as to lay flat against the car side. Most of the other builders notch out the angle here to achieve this. And yet another interesting item to be found on the GSC car, (although not an exclusive to GSC), are the angular braces tucked up under the hopper slope sheets at the ends of the car. These route from the buffers up to the junction of the hopper slope sheet and the bolster web sheet. I would imagine that these greatly stiffen the car, especially at the ends, but I was surprised that many of the other car builders didn't have this feature.

The final GSC unique item is the way that the side and end top chords are put together. These cars are the only ones which use a riveted corner piece to attach the two items together. I do not know just why this method was chosen, as welding seems much stronger to me. However, if I had to speculate, I would say that since this appears to be a standard supply item, then this appeared to be the overriding factor here, as many of the coal triple hoppers use this piece of gear. The Dolese cars, which I have drawn, are equipped with a Universal model 7400 hand brake, and Barber S-2 trucks. These cars are equipped with the empty-load brake system, and operate in a captive service between near Oklahoma City, OK., and Wichita, KS., in gravel service. All of these cars have been recently repainted a bright yellow with black markings. One car has been destroyed, but I do not know exactly which one.

TRINITY

As with any freight car design, the Trinity design features it's own unique set of characteristics. And at the top of the list would have to be the dished out areas present on the side sheets between the posts, also known as "waffles". As was discussed above, this feature was incorporated for it's strength factor. One thing to notice about this item is that the waffling is only located in between the hopper slope sheets, where the commodity resides, as this would be where the greatest need for it's properties are at. Although the areas between the bays must also be rigid, regular plate steel is adequate here.

The Trinity car combines the use of both pressed metal items and standard off the shelf structural items, each where appropriate and necessary. Pressed items can be seen in the side sheet posts, (although unlike the GSC car, these ribs are of a constant dimension from top to bottom), and in the hopper slope sheets, quite similar to the GSC design. All other items are standard structural components. The top and side chords are of 5 x 5" tube stock. The end uprights are 3.5" angle stock, as are the car end centerline upright supports. The brake gear, which is top mounted, is supported by 3.5 x 6" angle stock. The hand brake is by Ajax, and one thing worth noting here is the fact that the brake chain wrap on this installation is opposite the others, it being wrapped in a clockwise direction. Most of the other handbrakes are wrapped in a counter-clockwise direction. This car also has the empty-load braking system. The trucks are ASF Ride Control ®. The Western Pacific cars that I inspected for the drawings are painted all black with white markings.

PORTEC

The Portec cars have an aura all of their own: brute strength! These cars feature massive side posts, top chords and end chords. The hopper bays are very angular, with sharp lines present at every turn. Of all of the aggregate hoppers in this article, this car design is probably the easiest to model, (and draw!). It has square side posts and is the only car of the group that lacks side post flanges. The interior of the car also represents a change from the other builder's designs, as the hopper slope sheets are not of a single piece design, but are comprised of several pieces. Also, this car's center partition doesn't extend to the top of the car side, as do the Trinity and GSC designs.

The Portec cars actually comprise cars of several design variations, and from several corporate entities. While the word "Portec" may also include both the Georgia Rail Operations, at Winder, Georgia, (the subject of our drawings), and the Midwest Freight Car at Clinton, Illinois, in actuality each facility produced different designs. The Western Pacific cars that are the subject of one of the drawings is from the Winder, Georgia plant.

However, the TRAX cars, which are shown in an advertising circular as being built by PORTEC at Clinton, Illinois, are of a slightly different design. The TRAX cars, while of the same similar design as the Winder cars, do have several distinctive differences. The most obvious would have to be the extensions built on top of the car. While I have not been able to measure a car, by measuring a photograph of a car, I would surmise the extension to be about 8 inches high. Since the cubical capacity is still listed the same as the Winder car, at 2300 cuft., it stands to reason that something else must be different about the two designs. And there is: the MFC cars have slightly shorter car side heights. It's tough to see, but it is there. And speaking of 2300 cu.ft. hoppers, note that this is also the same capacity as the Trinity car. Here though, the differences are in the truck centerline bases; the Trinity car is some five feet longer in this dimension. This dimensional difference can be easily seen in the hopper to hopper outlet distances.

Anyway, another subtle distinction between the GRO and the MFC cars is that the MFC hopper bays have a curve introduced just below the car side, very similar to the Greenville design. The last spotting feature is the fact that the MFC cars have a tow fixture comprised of flat stock welded between the ladder upright and the bolster location, (the Portec cars have tow rings instead). The WP cars that I inspected all had Ajax handbrakes and ASF trucks. One thing on the brake system here, which is also of the empty-load design: the brake trainline pipe cannot be seen from the car side. Unlike most hopper designs, wherein the trainline runs down along one side of the car, the Portec car design has this pipe running alongside the centersill. A final item on this car design is to note the fact that on the various Western Pacific cars that I inspected, at least two different striker styles were observed. The most common style, which is of a fabricated trapezoidal design, is the one that I have drawn. There are also some cars that have a square fabricated design. And at least one car was found to have one of each style on each end. Why there should be two different designs within the same production run is beyond me, especially since they are fabricated and not castings. The different styles of strikers do not appear to have been installed on account of repairs, and there does not appear to be any date or serial number distinction, either.

BETHLEHEM STEEL CAR

Although the Bethlehem Steel Car Company, (now known as the Johnstown America Corporation) has a long history of car manufacturing, and is responsible for quite a large percentage of the rail cars found on the rails through the years, we could only locate a singe order of aggregate twins that have been built since 1970, our cutoff date. This order, leased to (circa 1974) the Texas and Pacific Railway Company, was fairly large though, at 650 cars. At first glance, these cars might be mistaken for coal cars, since they follow BSC's format similar to the coal cars. These cars are of a riveted construction, and aside from the kit built ATW cars of 1992, are the only aggregate cars of this type to be found in recent construction.

Although these cars have been confirmed as actually being in aggregate service, there is a give away as to their intended utilization; remembering that it is almost impossible to fit 100 tons of coal in to a twin, but 100 tons of rock will, (this car is marked as a 100 ton car). The car's basic layout also suggests it's service, as it has the wide spaced hopper outlets and is of a relatively compact design. As with most of Bethlehem's hopper designs, this car features the integral tow casting at the lower end corners of the side sills. The hand brake on this car appears to be of the Ajax brand, although we do not have any specific data on this as of yet. And finally, this car does not employ the empty load braking system.

PACIFIC CAR & FOUNDRY

Pacific Car and Foundry is also represented in our survey with one lot of cars, these being the Southern Pacific 465700-466049 series. At first glance, these cars might be easily mistaken for a Greenville design, and indeed, early on in the roster process, it took some searching out to differentiate what was what. As there are only a couple of minor differences between these two designs, we shall highlight them only. The first spotting feature to be found is at the side posts. The PCF design does not taper in at the top of the car, as the GSC type does. Also, at the bottoms of the posts, there can be found small detail variations in the flange structure, as the PCF design has the flanging structure flaring out near the bottom of the post.

The other two spotting features are indeed very minor, but are presented here nonetheless. First, the car top chords are tied together at the end corners differently than the GSC design. The GSC design has a rounded casting here, while the PCF does not. I have not actually seen a PCF

car in person, but it would appear that in this location there is a flat strap located across the width of the car end at the top of the slope sheet. And finally, the tow ring structural details differ between the two designs. Notice that the Greenville design has a box type structure located directly above the tow ring, which serves to spread the loads around, while the PCF car has small triangular gussets employed for this pur-pose instead. Basically, other than these minor detail variations just discussed, there isn't much to differentiate between these two designs. While at one time it would have been easy to keep track of these cars, as they were only to be found on the SP, now that these have been sold to secondhand users, they may be liable to be found most anywhere.

ORTNER FREIGHT CAR

The Ortner Freight Car Company, (now a part of Trinity Industries) is a very well known and highly respected manufacturer of aggregate cars. However, when the word, "Ortner" comes up, invariably the tagalong, "Rapid Discharge ®" is added. The rapid discharge line of cars dominates the production history of this company, but they did produce at least two orders of conventional twin aggregate hoppers, all made at their plant at Mount Orab, Ohio.

These cars also have their little spotting features which distinguish them from all others. The most obvious would have to be the fact that the side posts are made from the same square tube stock as is the top side chord member. This causes the posts and the top side chords to meet on the same plane, whereas on most of the other cars, the side posts are indented slightly at this location. This really becomes visible during the middle of a sunny day, when the shadows are at the extremes.

Another factor is that the posts do not extend to the lower sill line, except at the middle post and at the bolster locations. On the other car designs, all of the posts are of the same height. And speaking of the posts, note that the center post is riveted all of the way up the car side, and that the bolster posts are riveted half way up the sides, (some of the GSC cars also have this feature).

The Ortner car also has another spotting feature, even if only to be seen at trackside level. These cars have a wide strap that ties the car lower sill to the center sill, which just begs to be modeled. I was surprised to find that the Gifford Hill Ortner cars that I inspected in Dallas lacked the empty load braking feature: most of Ortner's HTS cars have this item. I do not know just what handbrake this car has, although it looks like an Ellcon style to me. The GHIX cars are painted a red-orange, with a black "GIFFORDHILL," white marks, and a black, white and red-orange logo.

CONCLUSIONS

There you have it. . .a post 1970 survey of aggregate twin hoppers. For those so inclined to model any of these cars, it ought to be a fairly easy task, with the probable exception of the Trinity cars. There are several decal sets in HO scale that are dedicated to these cars, all in the Herald King line. Set # H-600 for the 1977 SP version and #PR-127 for the 1979 GRCX version.

(Below) **SP 466627 passes through Mojave CA in 1985. This car, built in 1979 is from the last order of aggregate hoppers made by Southern Pacific.** David G. Casdorph photo.

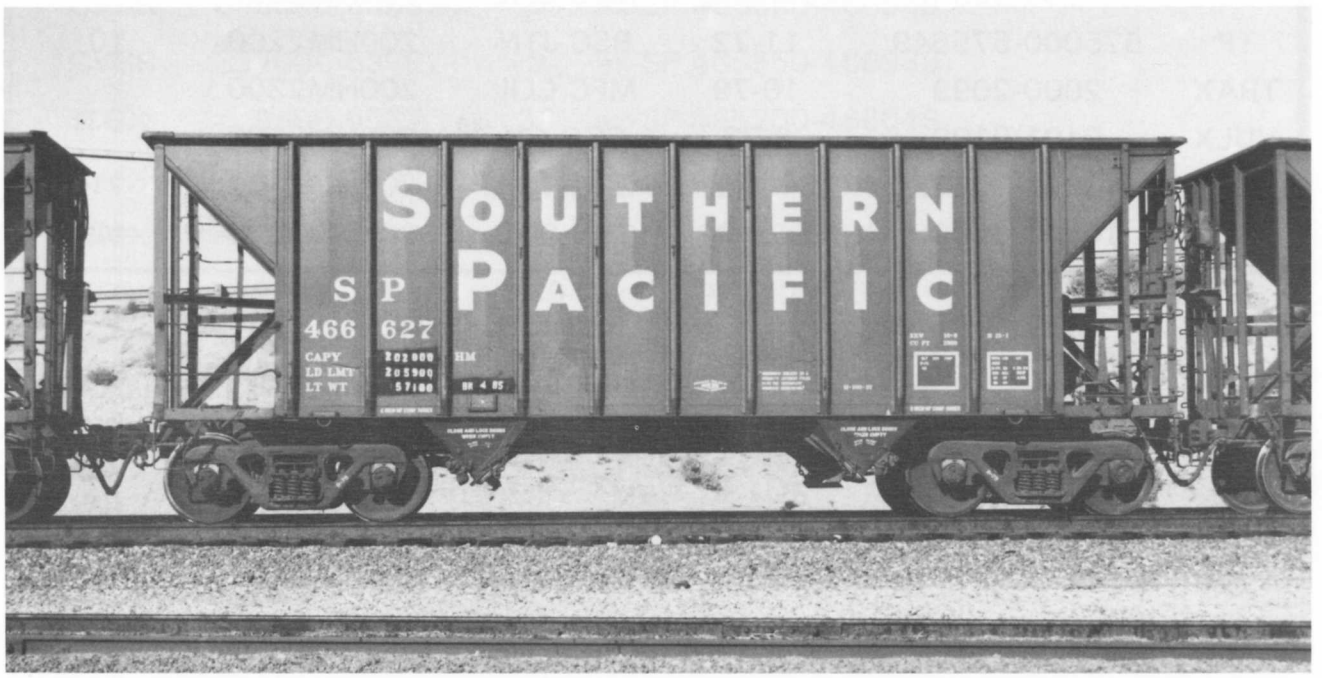

AGGREGATE HOPPERS November 1992

Marks	*Number Series*	*Built date*	*Builder*	*Capy-AAR-CuFt*	*Notes*
ANXX	105, et al	10-73	GSC GV	HM2100	
DOLX	1000-1019	8-78	GSC GV	200HM2100	
GFHX	1001-1043	5=6-73	OFC COV	200HM2100	
GIHX	1500-1599	8-78	GSC GV	205HM2100	
GIHX	2000-2054	7-79?		HM2200	2
GRCX	1001-1025	12-70?	GSC GV	207HM2100	1
GRCX	1026-1050	6-72	GSC GV	207HM2100	
GRCX	1051-1095	10-79?	GSC GV	HM2300	1,3
GRCX	1800-1859			HM2300	2,3
NW	150000-150099	4=5-89	TRI MO	203HMS2200	4
SOU	100300-101499	4=11-70	GSC GV	200HM2100	
SOU	101500-101799	4=6-72	GSC GV	229HM2100	
SOU	101800-102099	2=4-76	GSC GV	HM2100	
SOU	103300-103699	6=9-74	GSC GV	229HM2100	
SOU	103700-103999	2-75	GSC GV	HM2100	
SOU	105000-105249	2=5-81	OFC COV	200HMS2200	
SP	464000-464999	4=8-70	GSC GV	205HM2300	5
SP	465000-465599	9-74=1-75	GSC GV	200HM2300	6
SP	465700-466049	1=2-76	PCF RN	202HM2300	7
SP	466050-466549	9-78=1-79	GSC GV	202HM2300	8
SP	466550-466989	8=10-79	GSC GV	202HM2300	9
TCCX	1-25	8-78	GSC GV	200HM2100	
TCCX	300-359	8=9-79	MFC CLIL	204HM2000	
TP	575000-575649	11-72	BSC JTN	200HM2200	10
TRAX	2000-2099	10-79	MFC CLIL	200HM2300	
VULX	9101-9190	8-73	GSC GV	200HM2100	
WP	10301-10575	6=8-81	GROWGA	200HM2300	11
WP	10801-11000	6=8-91	TRN DAL	200HM2300	12

NOTES

1. Unconfirmed. Entry is via *Railway Age* order summaries.
2. Unconfirmed. Entry is via *Official Railway Equipment Register* data only.
3. Post January 1984.
4. Class H-48.
5. Class H-100-23.
6. Class H-100-29.
7. Class H-100-32.
8. Class H-100-36.
9. Class H-100-37.
10. *ORER* and BSC data show 2200 cuft. Photos show car marked as 2265 cuft.
11. Class H-100-29.
12. Class H-100-30.

CARS REBUILT WITH KITS FROM JOHNSTOWN AMERICA

Marks	*Number Series*	*Qty*	*Notes*
ATW	9001-9400	400	2300 cu.ft. Rebuilt 1992 CGI A.K.
CBRY	9001-9400	400	2300 cu.ft. Rebuilt 1991-92 CGI A.K.

DISPOSITIONS: November 1992

Marks	*Number Series*	*Qty*	*Notes*
CSXT	291050-291074	25	ex-TCCX
CSXT	291075-291088	14	ex-TCCX
GBRX	464863-464999	95	ex-SP 464000-464999
GBRX	465000-465699	539	ex-SP 465000-465699
GBRX	465700-466049	271	ex-SP 465700-466049
GBRX	466053-466538	30	ex-SP 466050-466549
GBRX	466555-466976	22	ex-SP 466550-466989
GVSR	629001-629580	181	ex-SP 465000-465599
GVSR	632000-632525	71	ex-SP 465700-466049
GVSR	636000-636524	5	ex-SP 466050-466549
GVSR	637000-637521	3	ex-SP 466550-466989
ITGX	9500-9537	38	ex-SP 465700-466049
KAIX	1000-1099	100	ex-SP 464000-464861
KAIX	2000-2054	55	ex-SP 464000-464861
MFCX	2000-2099	100	ex-TRAX 2000-2099
SONX	1001-1040	40	ex-SP 464000-999 (4 cars) ex-SP 465000-465599 (36 cars)
TRAX	2200-2300	4	ex-SP 464862-464999
VULX	1001-1068	68	ex-SP 464000-464861
WBCX	78031-78045	15	ex-CSXT, nee TCCX?

(Above) **ATW 9123 was rebuilt 3-92 in Atchison, KS with a "kit" supplied by Johnstown America. Class H-100-43.** (Below) **CBRY 9056 was rebuilt in 12-91 with a kit like the ATW car above. This car is also class H-100-43. Both photos,** David G. Casdorph.

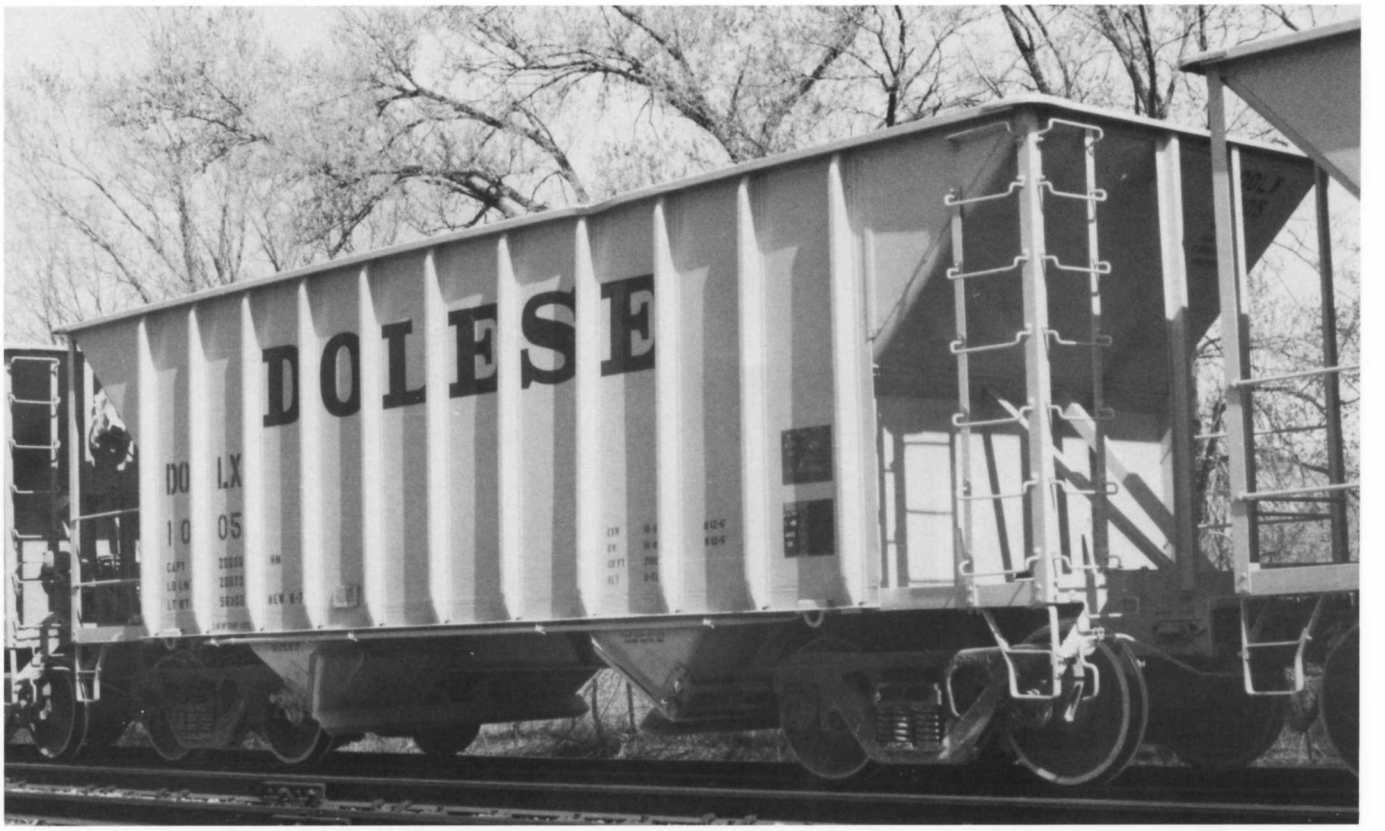

(Above) **DOLX 1005. Built by Greenville in 8-78. Note these do not have the rivets at lower portion of the end ribs (over the bolsters). Car is painted yellow with black lettering and unpainted trucks.** Jim Kinkaid **photo.** (Below) **GIHX 1574. Built 8-78 by Greenville Steel Car.** M.B. Foley **photo.**

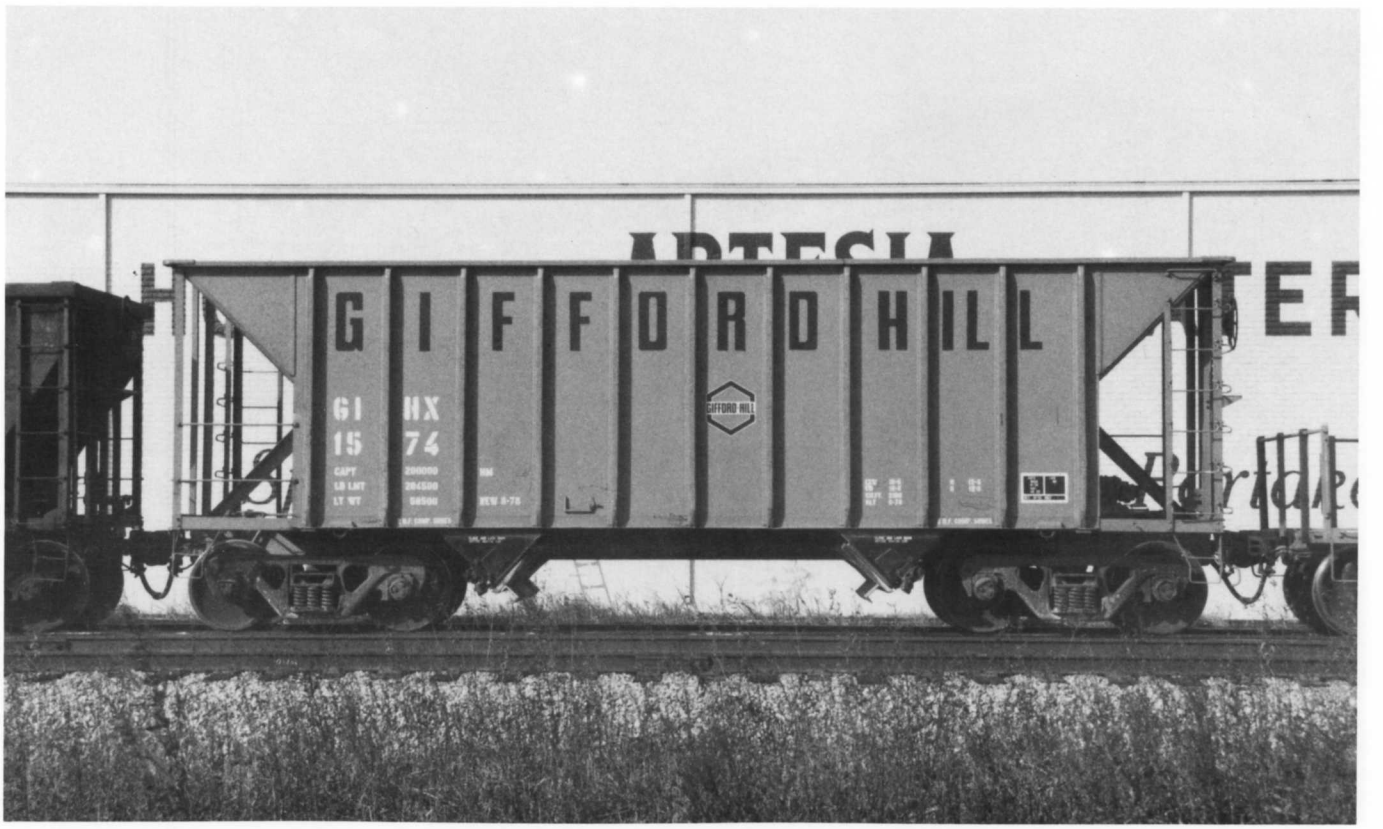

(Above) **GVSR 632043 was refurbished in 3-92 by GERR. Note the new reinforcements on the ribs.** (Below) **NW 150084 was built by Trinity in 5-89. Class H-48. Both photos,** David G. Casdorph.

(Above) **SOU 100307 was built in 1976 by GSC GV. Class HS31. This car was painted in 5-87. Note the rivets on lower part of the end ribs.** (Below) **SP 465981. One of the 350 cars built by Pacific Car & Foundry in 1976 for the Southern Pacific. Both photos,** David G. Casdorph.

(Above) **SP 466089 was built in 9-78 by Greenville Steel Car. Photographed in September 1992.** David G. Casdorph **photo.** (Below) **WP 10504. Built 7-81 MFC CLIL (Portec). Note the simplicity and angular look of this design. Wichita, KS 1992.** James Kinkaid.

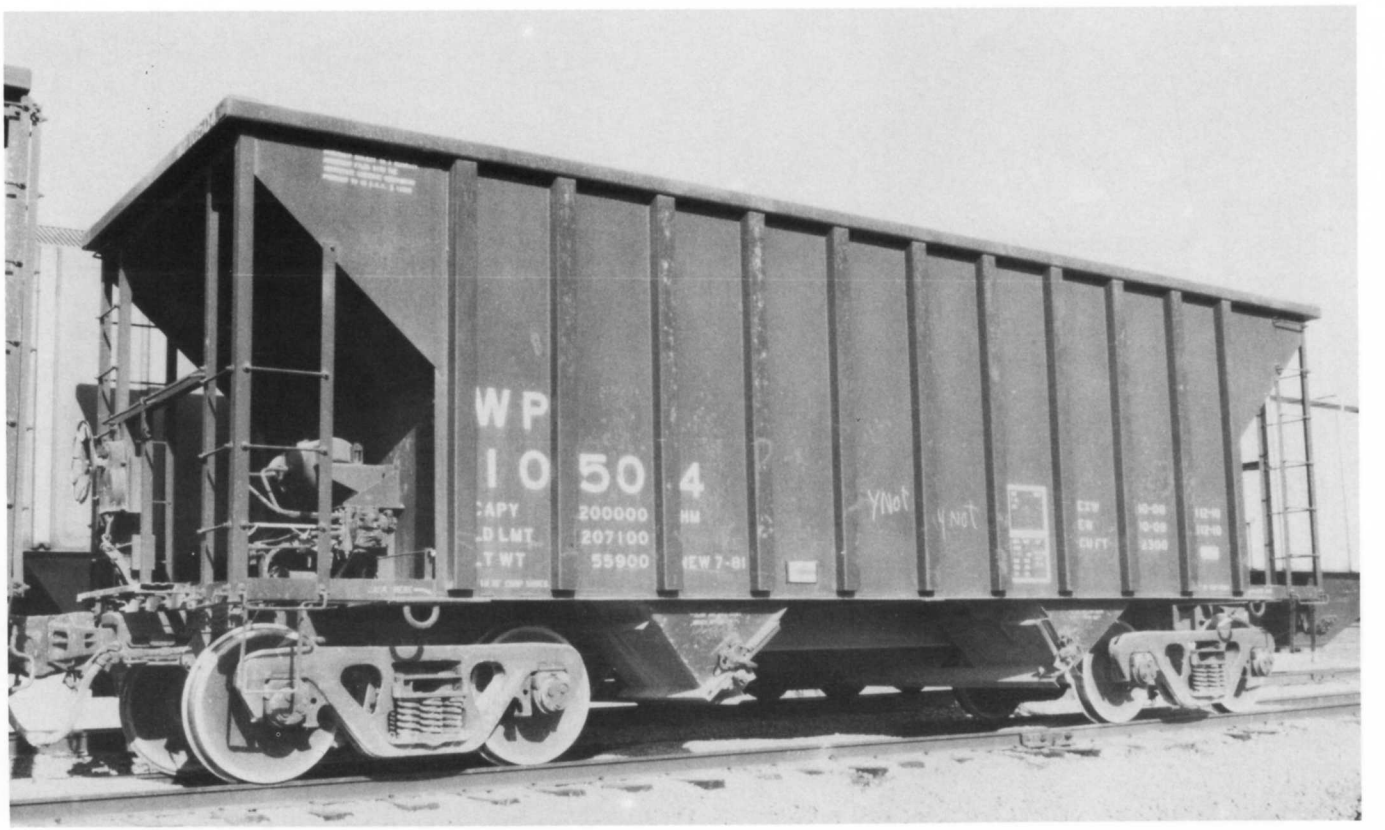

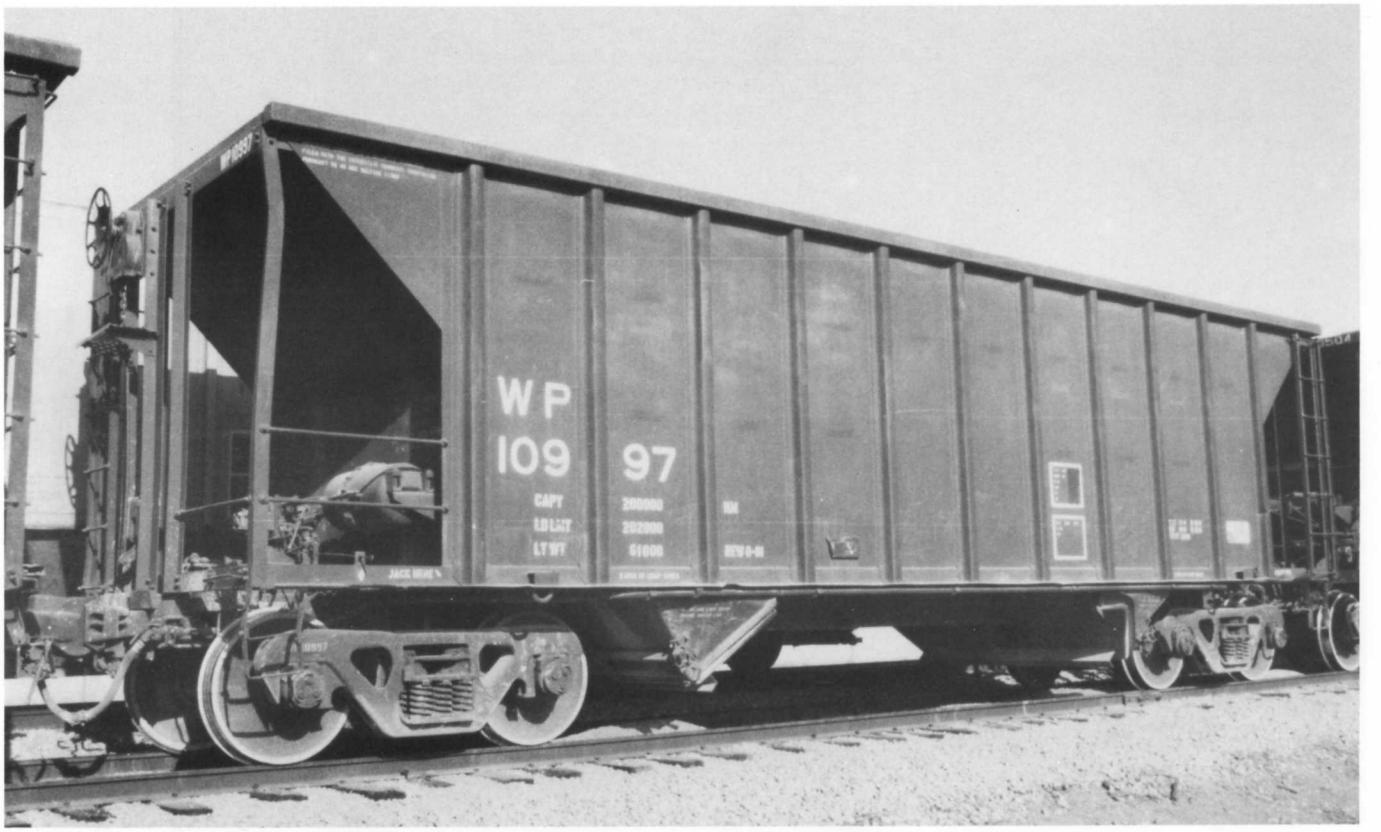

(Above) **WP 10997. Built 7-81 TRN DAL (Trinity). Though not obvious in the photo above, one major spotting characteristic of this design are the dished panels** (Below). **These greatly increase the strength of the side sheets. Both photos,** James Kinkaid.

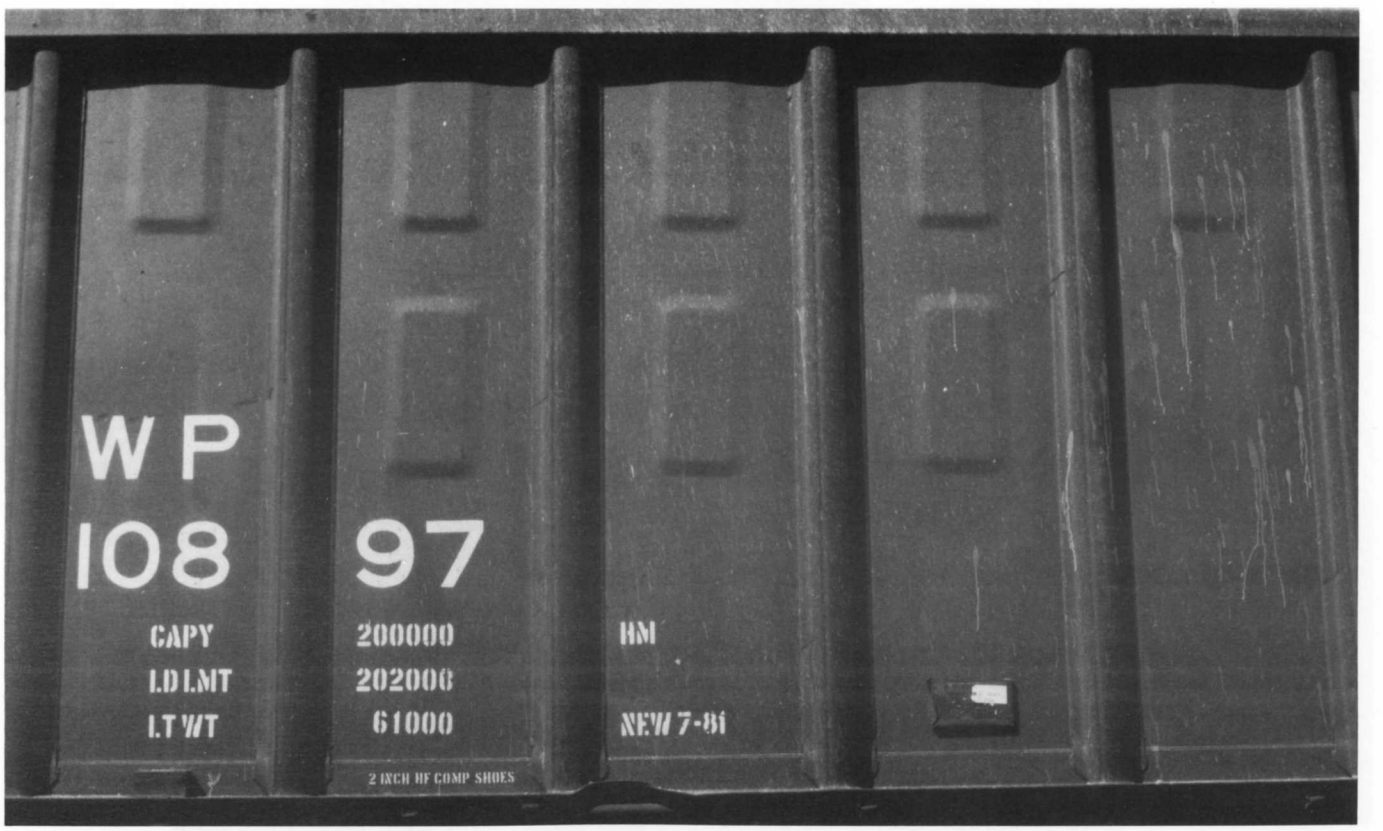

TP 575162. Note that the car is marked as 2265 cu.ft., while internal records and equipment registers list is as 2200 cu.ft. Built by Bethlehem Steel Car 11-72. Photo courtesy of Johnstown America Corporation.

(Above) **TRAX 2007 was built 10-79 by MFC CLIL (Portec). Painted dark green with white lettering. Courtesy** Rail Tex, Inc, **San Antonio, TX.** (Below). **KAIX 1037 just out of the rebuild shops. Out of 155 of these cars, Hurricane Andrew damaged or destroyed 84; all knocked over on their sides! Photo courtesy** Mark Zuercher and the Helm Financial Corporation.

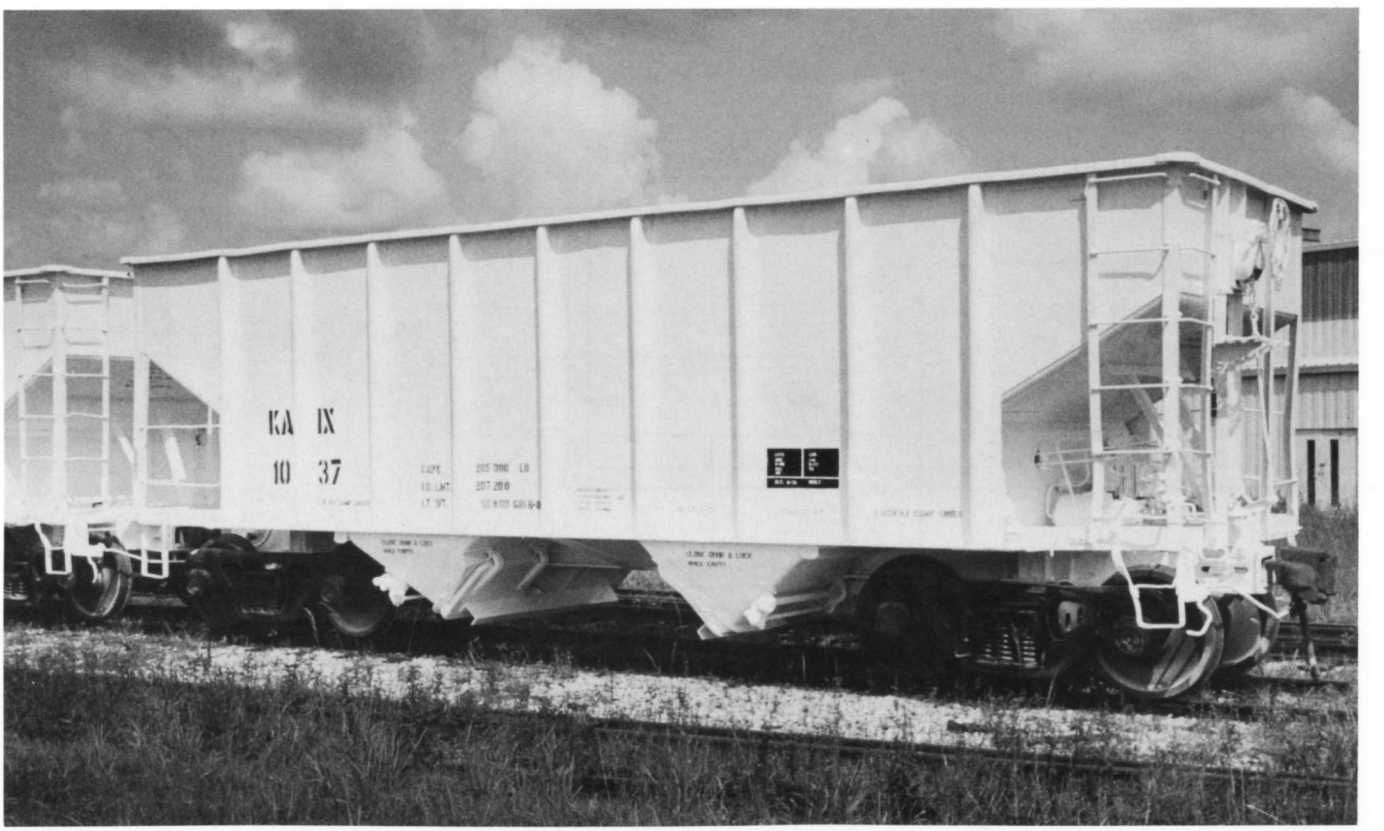

SECTION VIEWS DOWN THROUGH END OF CAR

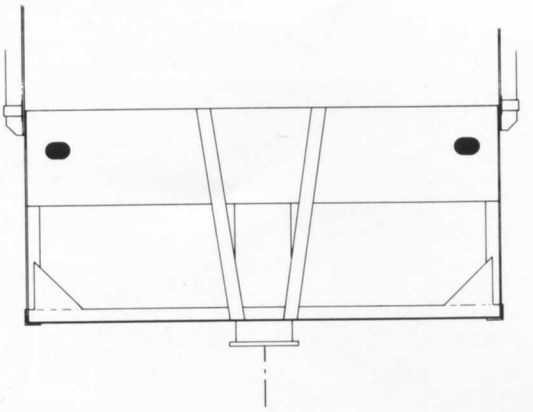

GREENVILLE

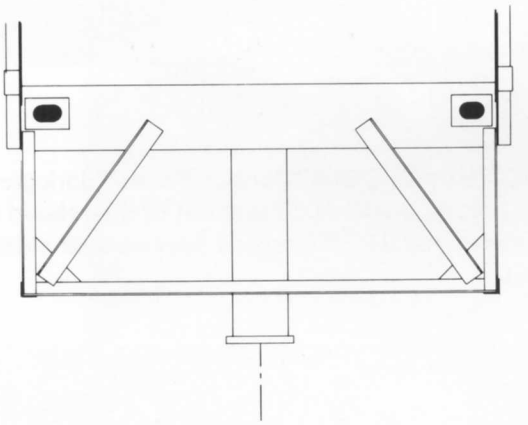

PORTEC

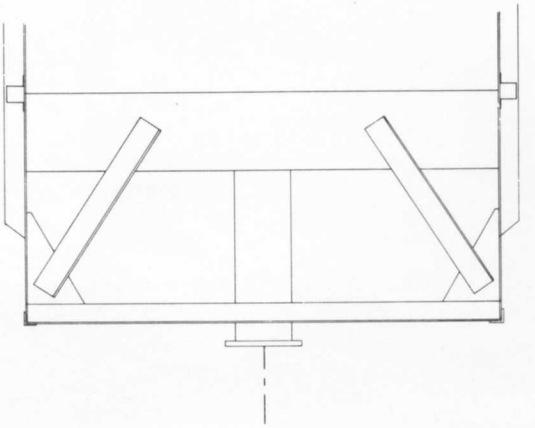

TRINITY

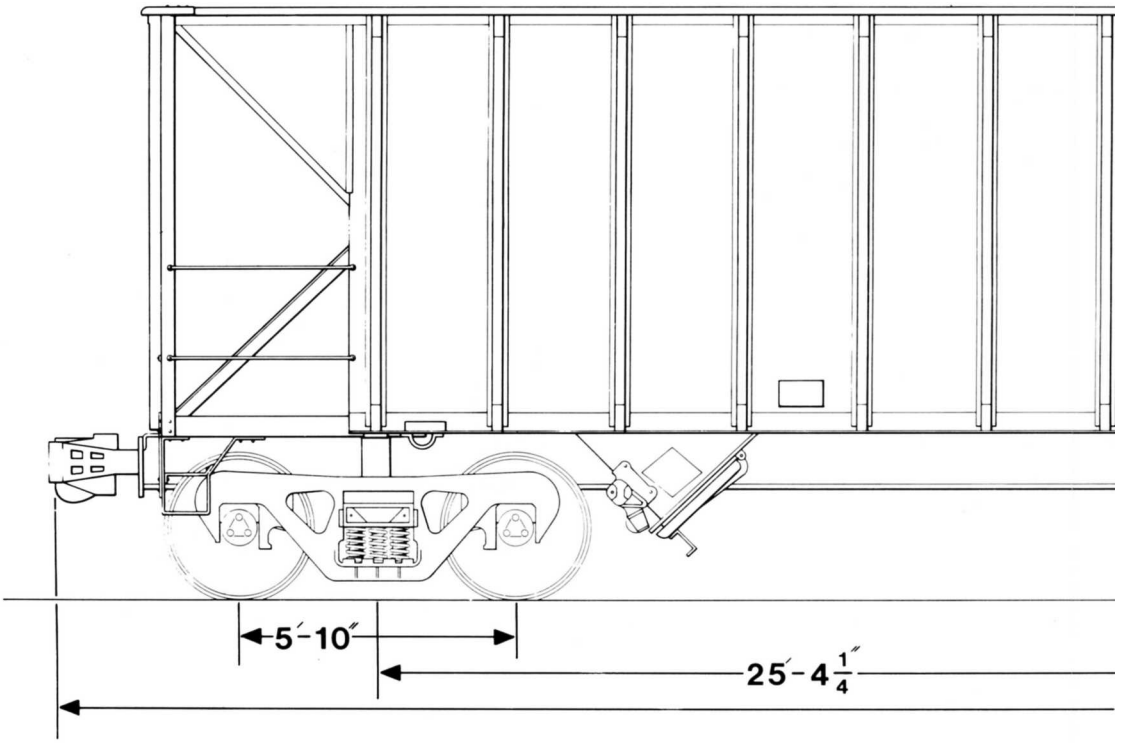

GREENVILLE

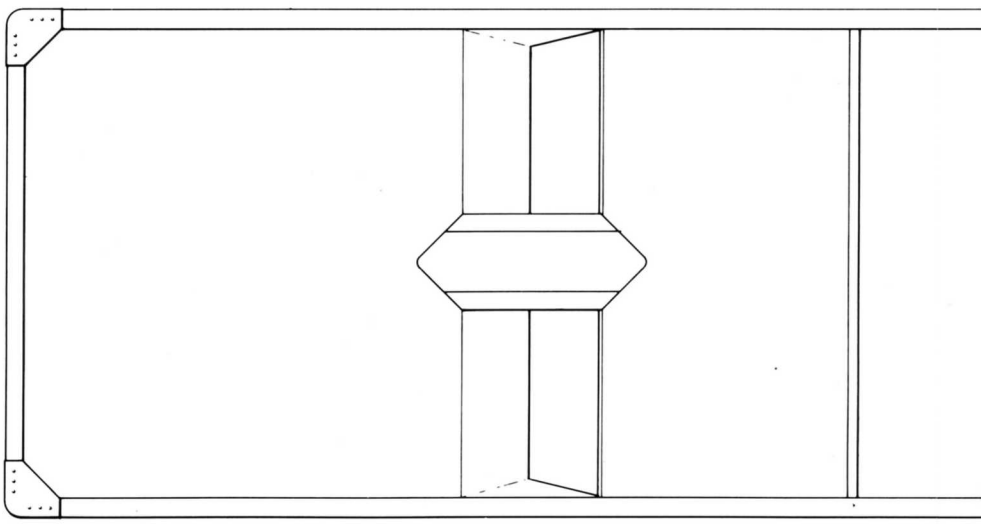

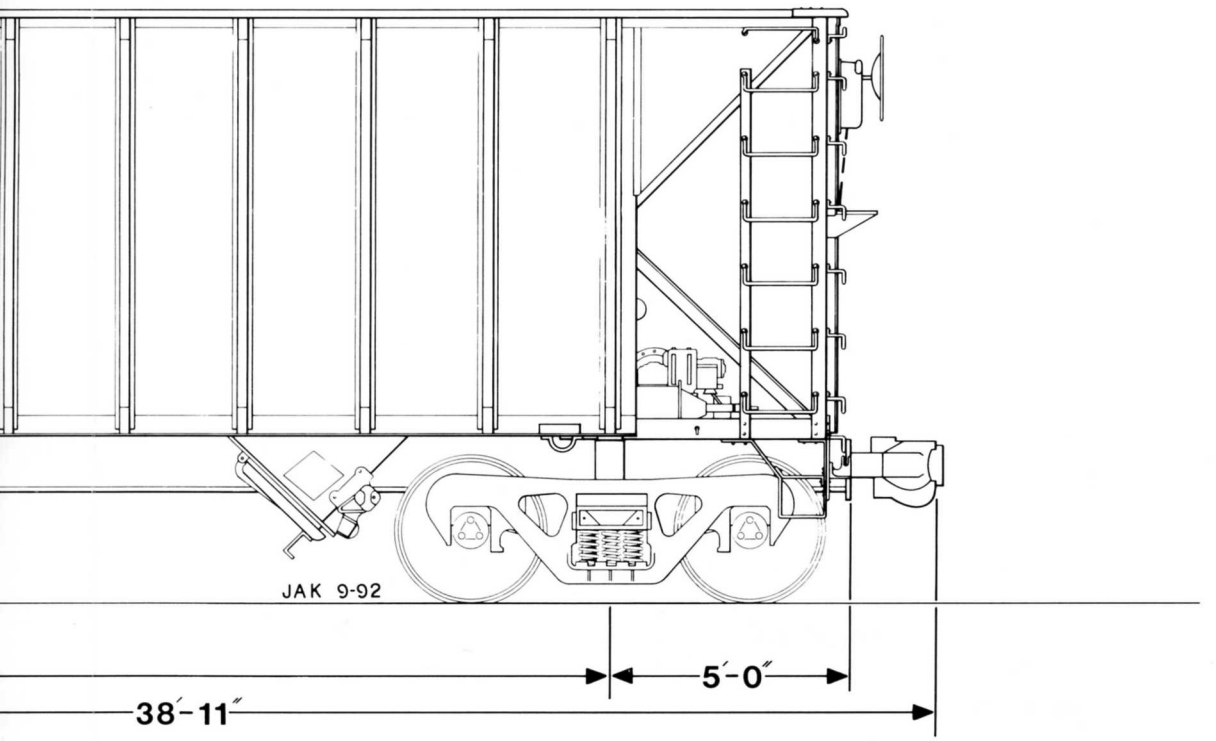

NVILLE

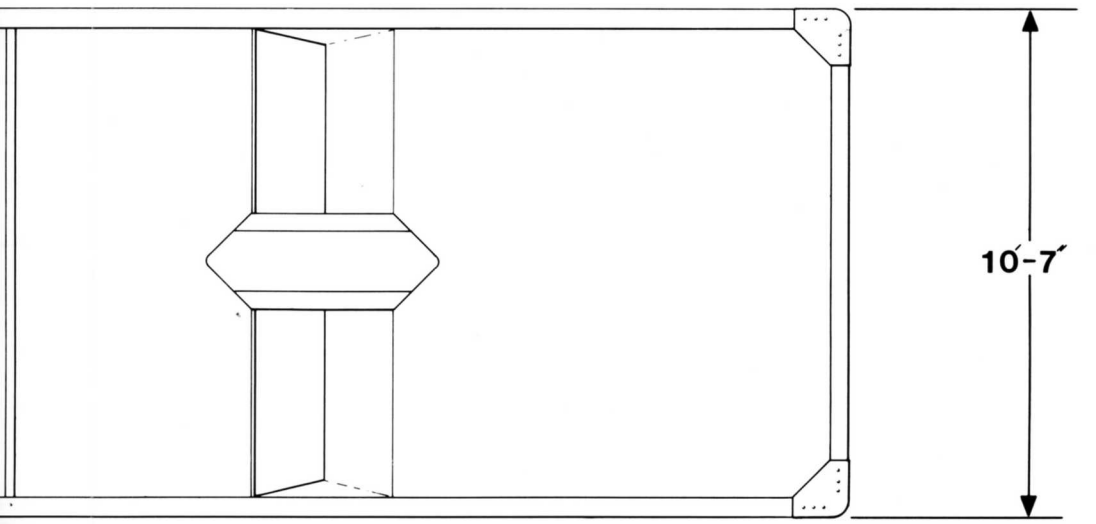

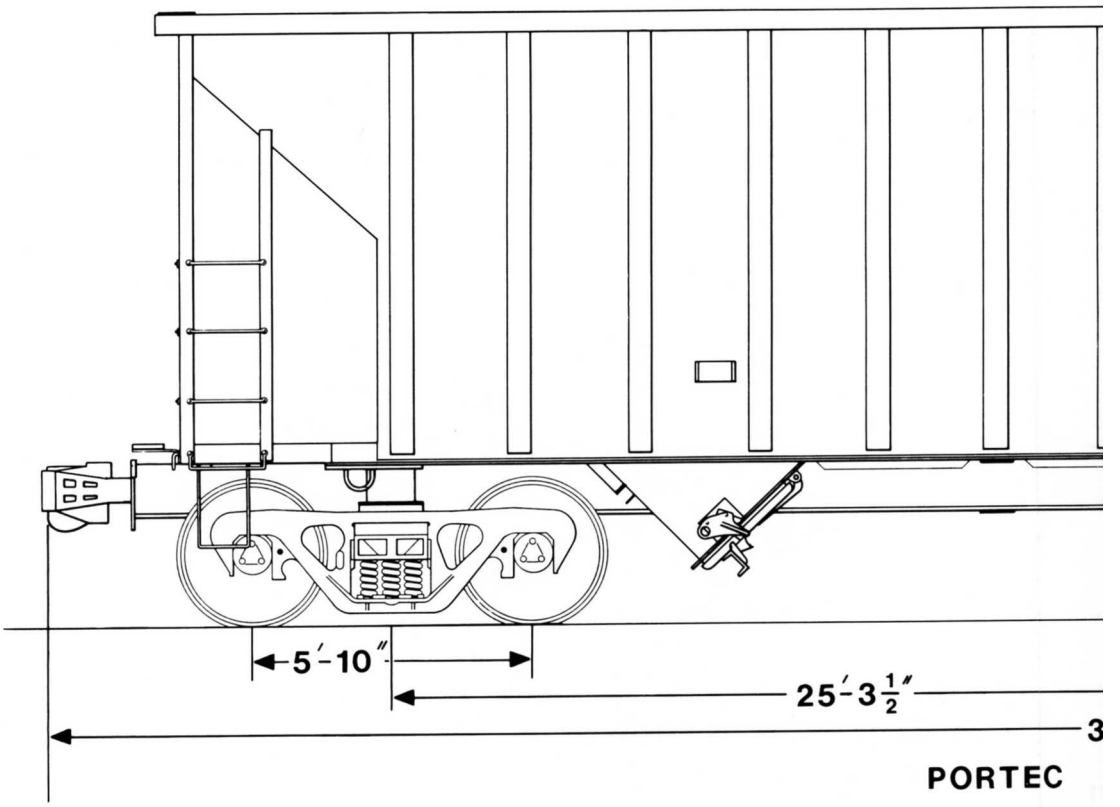
5′-10″
25′-3½″
3
PORTEC

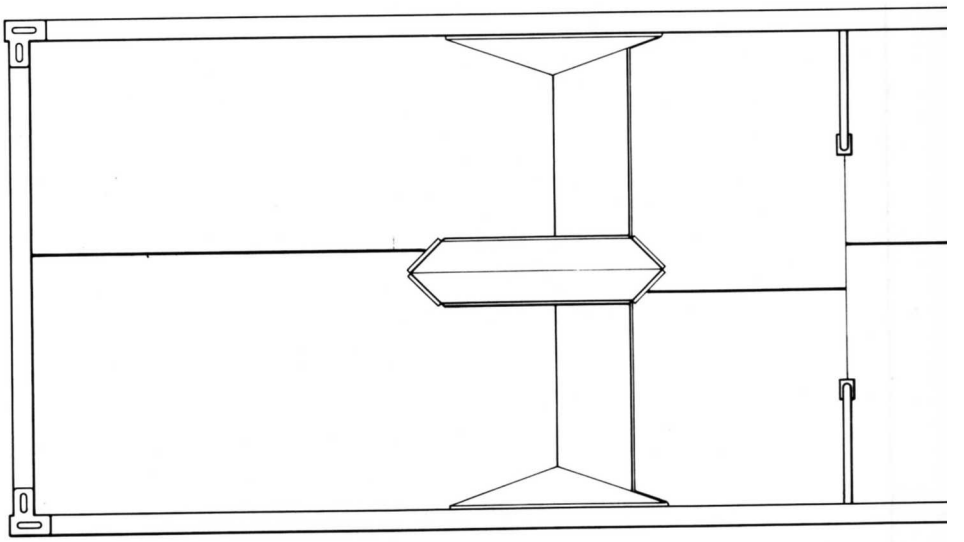

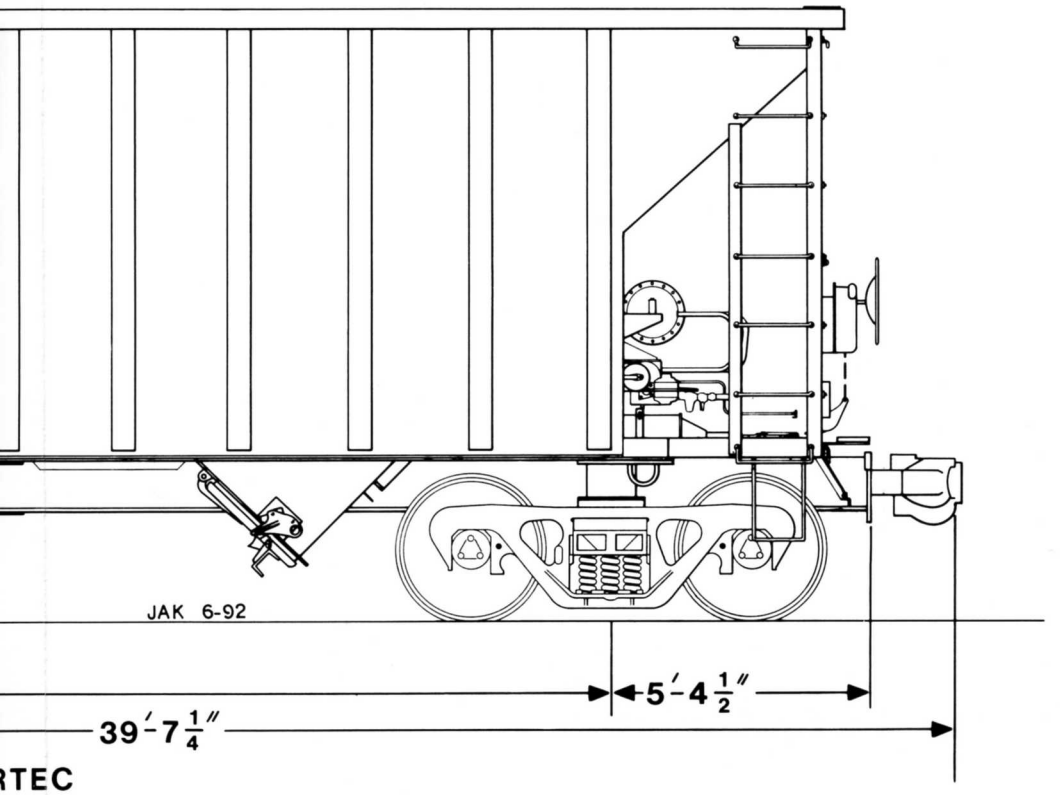

RTEC

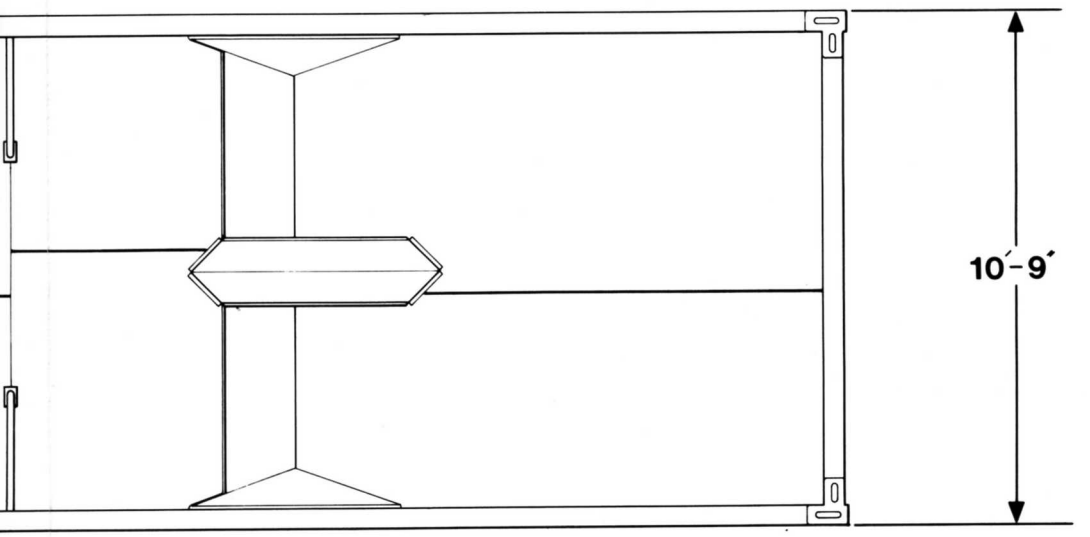

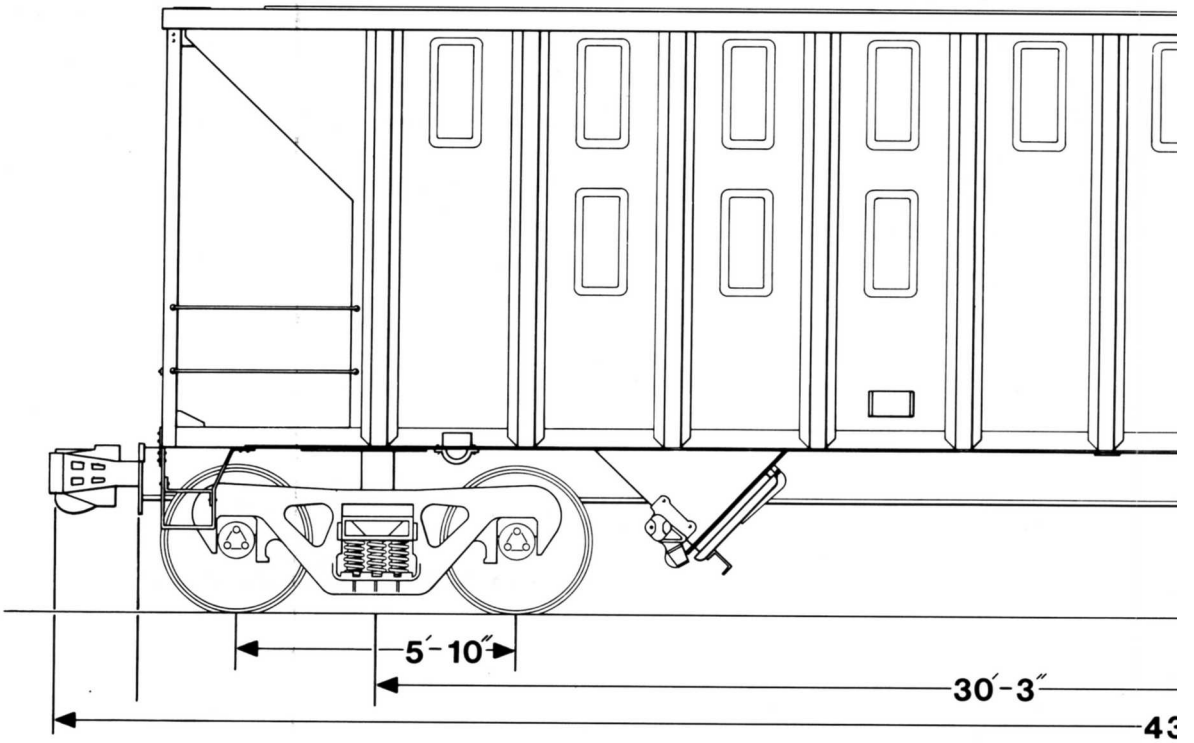

TRINITY

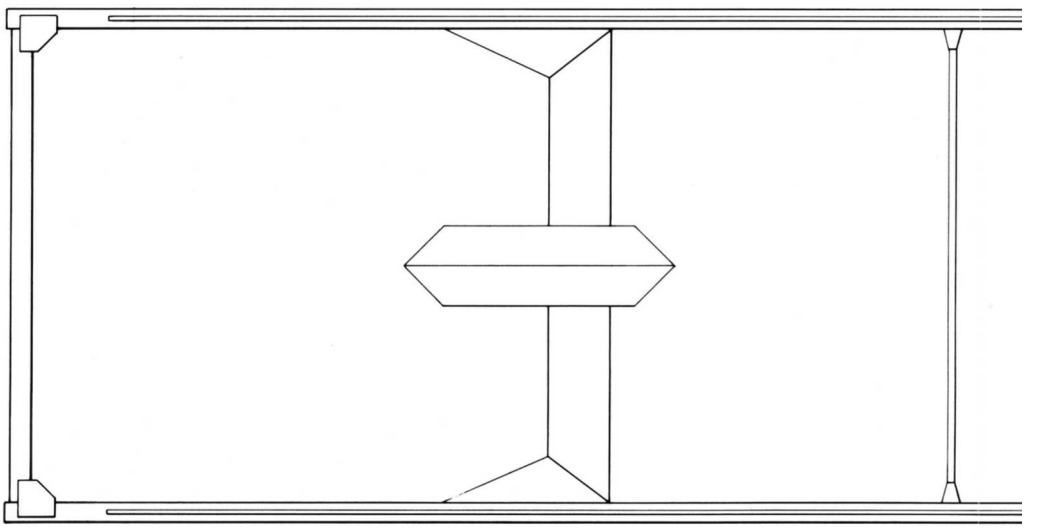

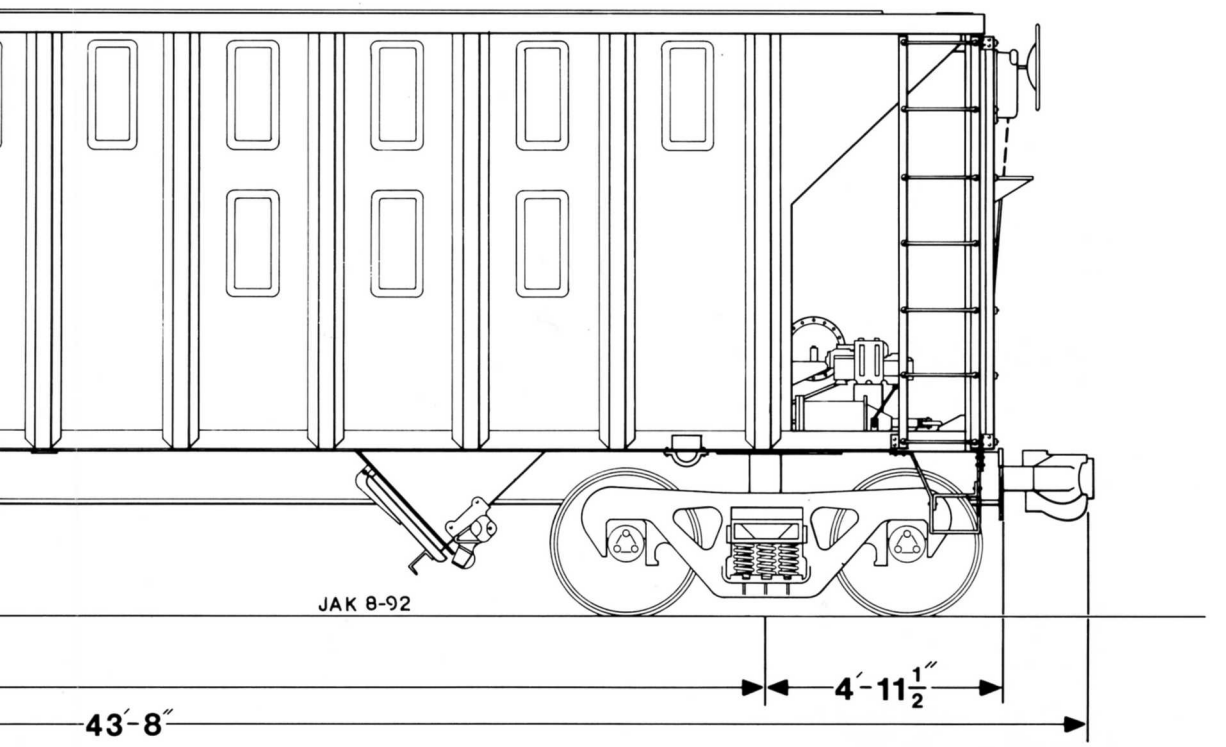

RINITY

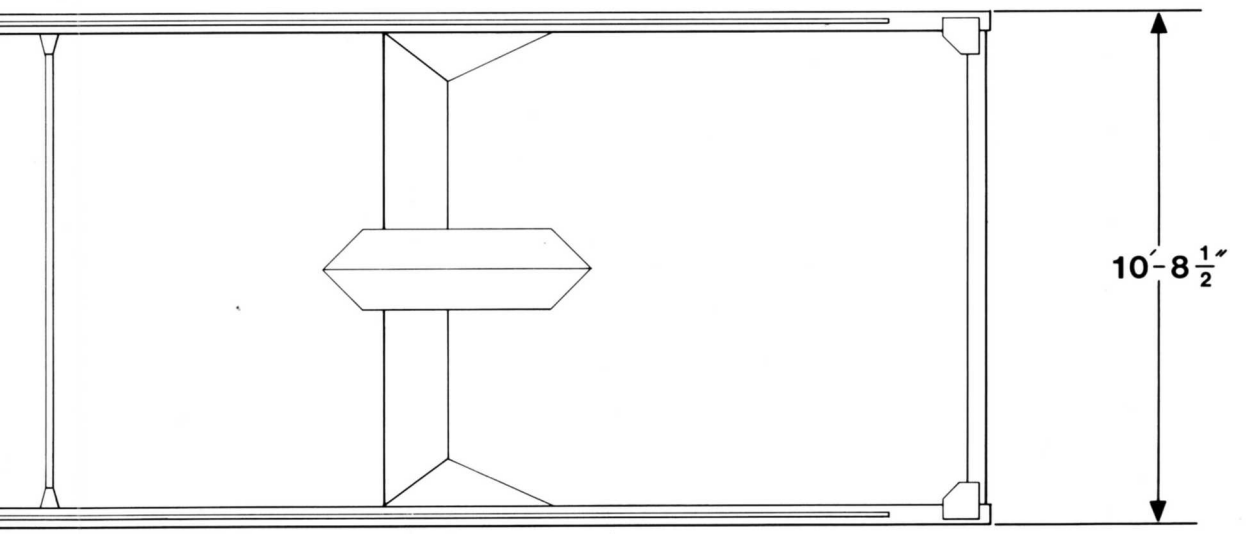

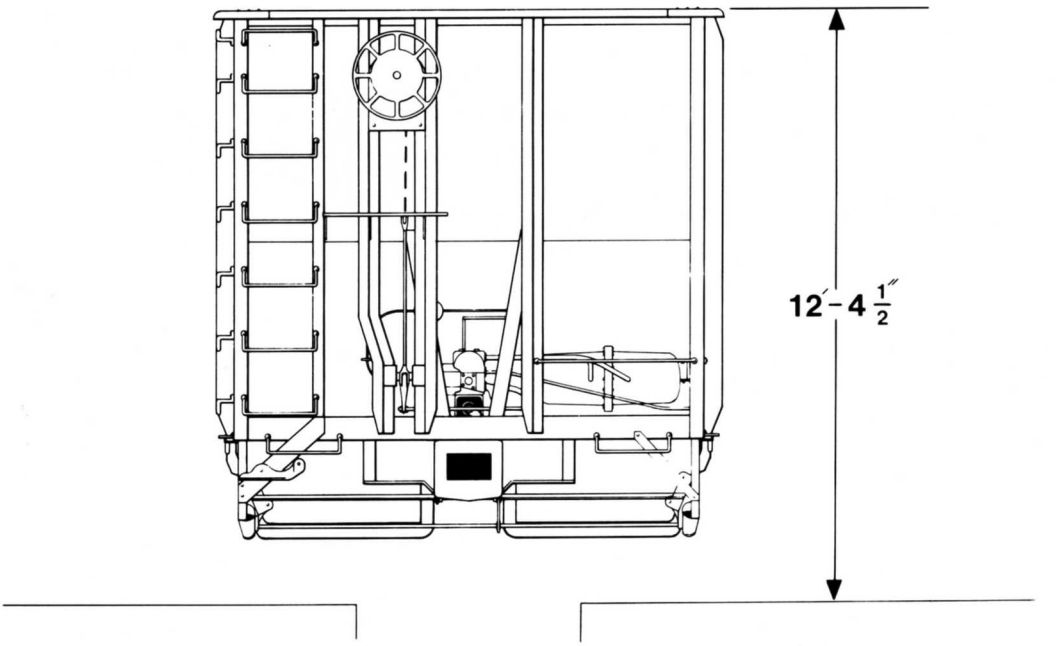

GREENVILLE

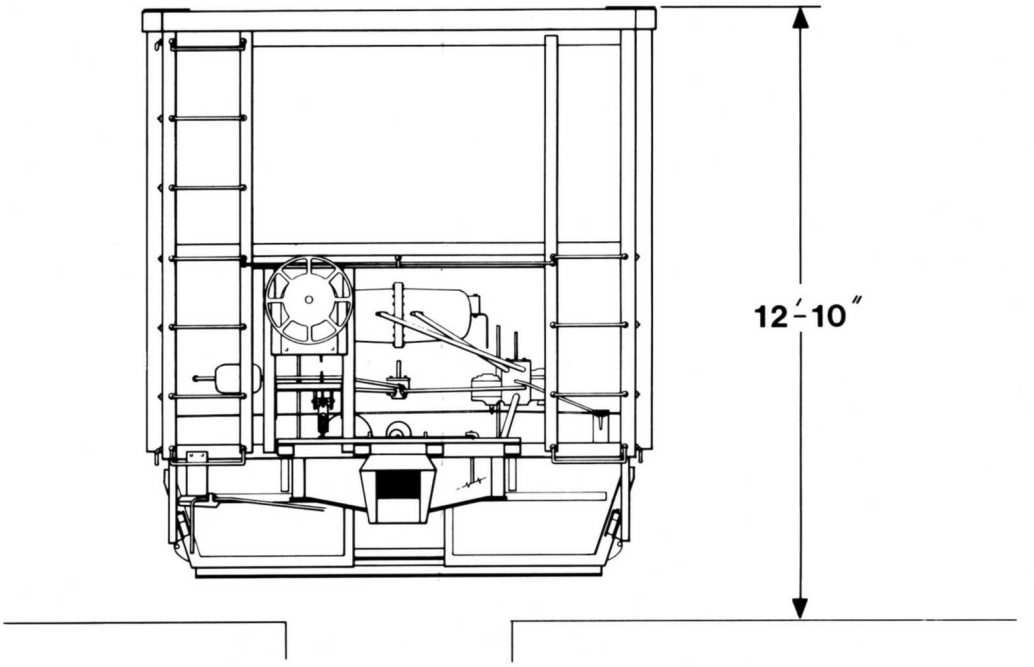

PORTEC

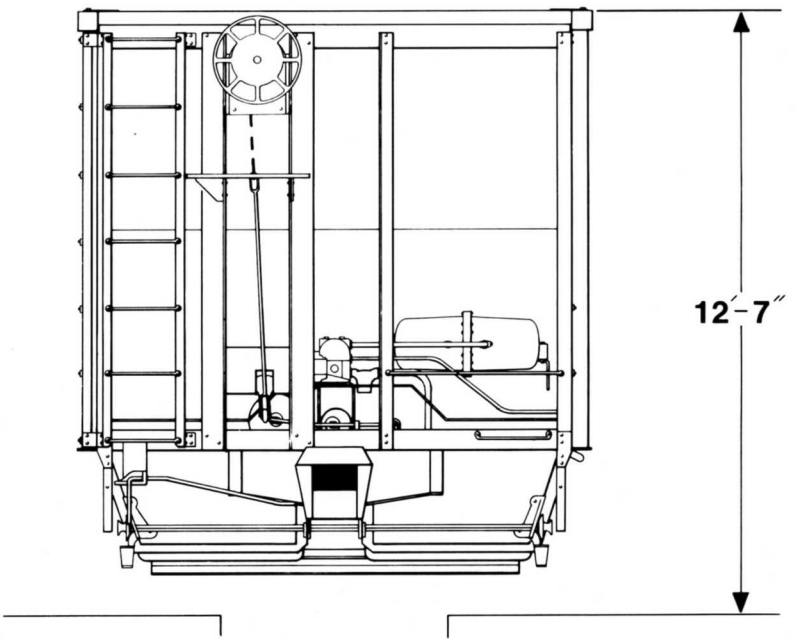

TRINITY

BACK ISSUES AVAILABLE

CSXT 1989 Freight Car Review. *Articles and rosters on Seaboard's pulpwood cars, CSX logos, Acquisitions etc. 50 photos.36 pages.* **$15.95**

RBOX Freight Car Roster and Pictorial. *Detailed roster of Trailer Train's "Railbox" fleet of the late Seventies. Detail and roster photos show differences in box car design. Also included is a roster of RBOX dispositions. 44 photos. 46 pages.* **$15.00**

BC Rail Freight Car Roster and Pictorial. *Detailed examination of this interesting railroad's unique fleet of freight cars serving the northwestern part of North America. Detailed roster. 64 quarter-page color photos. Includes rarely seen intermodal equipment!* **$30.00**

CP Rail Freight Car Pictorial. (FCJ37/THM1) *60 large B&W photos show how one of Canada's two largest railroads moves freight on the rails. Detailed captions with roster notes. 60 B&W photos. 32 pages.* **$15.00**

Reefers: A short history of refrigerator cars in America 1840-1984. (FCJ44)*Historical essay on the development of the mighty refrigerator car. 19 large B&W photos, 2 figures, 4 graphs, 2 charts.* **$14.95**

Modern Freight Cars: A Photo Anthology. *102 half-page B&W photos of modern freight cars arranged by mini-subjects. Detailed captions tell of the car's history and importance. 72 pages.* **$30.00**

Modern Piggyback Trailers. *190 half-page photos. Chapters on railroads, Transamerica Leasing, XTRA Inc, motor carriers, private operators etc. 112 pages.* **$40.00**

Freight Cars Journal Members may deduct 20% off of above titles only.
Add $3.00 per order for shipping ($4.00 Canada / $6.00 others)

Freight Cars Journal
P.O. Box 2480
Monrovia, CA 91017-6480

INTERMODAL TRANSPORT

·Domestic & International Containers ·Piggyback Trailers ·Platforms
·Stack Cars ·Chassis ·Handling Equipment

The ***hottest*** thing in today's transportation scene is the high-tech, space-age, computer-era intermodal freight*!!* To meet that challenge for modelers, historians and enthusiasts is a new publication, *Intermodal Transport Modeler.* Prototype news and rosters. Scale model reviews. Decal reviews. Rosters. Photos. 8.5 x 11 format. $20.00 (USA) for 4 issues.

Society of Freight Car Historians
P.O. Box 2480
Monrovia, CA 91017

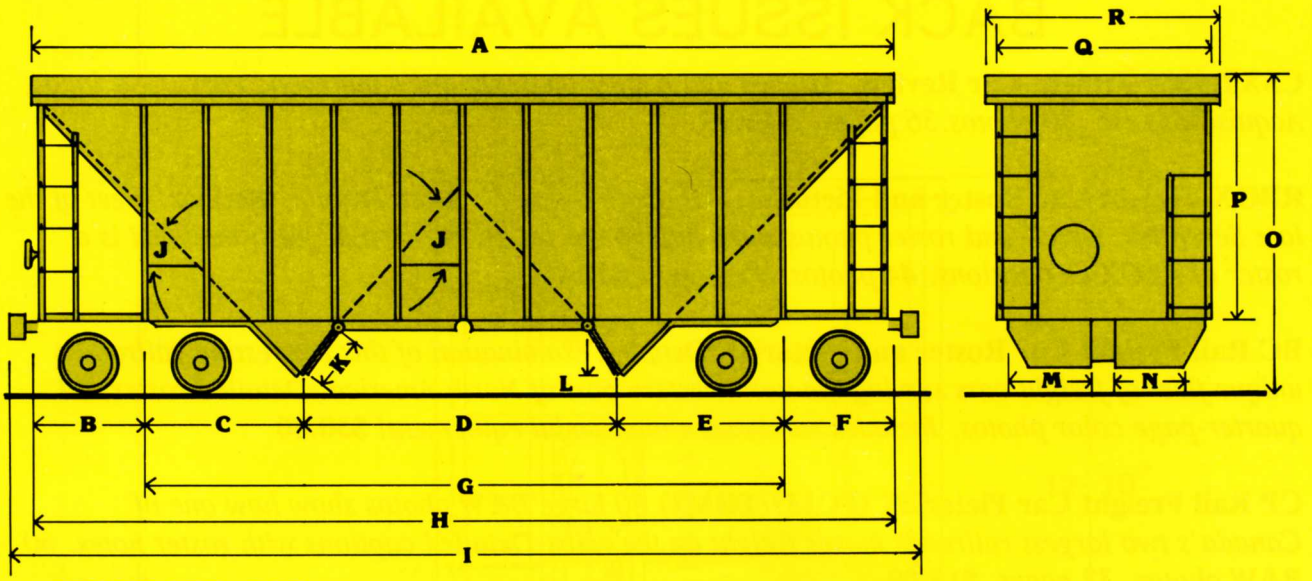

STANDARD CAR

Car Numbers	TRAX 2000-2099
Built Date	1979-
Load Limit	202,300 lbs.
Capacity	200,000 lbs.
Light Weight	60,700 lbs.
Cooper Rating	E-70
Cubic Capacity Level	2,300 cu. ft.
Cubic Capacity 10" Avg. Heap	2,547 cu. ft.
Door Design	Single Open
Number of Hopper Openings	2 Sets
Door Lock	Enterprise Type "D"
AAR Code	HM/H340

A	38' 9"	G	29' 9"	M	3' 7¼"
B	5' 5½"	H	39' 2"	N	3' ¾"
C	7' 6"	I	43' 3½"	O	12' 9"
D	14' 9"	J	40°	P	9' 11 15/16"
E	7' 6"	K	2'	Q	9' 9½"
F	5' 5½"	L	16"	R	10' 8"

The standard car is the traditional type aggregate car. It has 40° end slope sheets with two sets of chute type doors which open towards the center of the car. The cars are equipped with the Enterprise type "D" hopper doors. This particular type door can be operated by one man, from one side, resulting in minimum labor expense for unloading . The car is designed to carry 2300 cubic feet of material. It was manufactured by Portec, Inc., Clinton, Illinois. This equipment is satisfactory for the hauling of all types of "loose" aggregate such as gravel and washed rock.

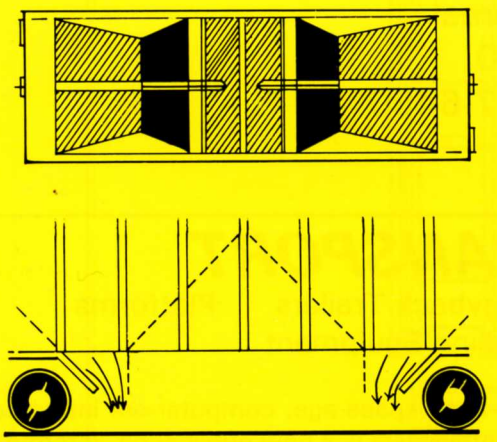

STANDARD AGGREGATE CAR

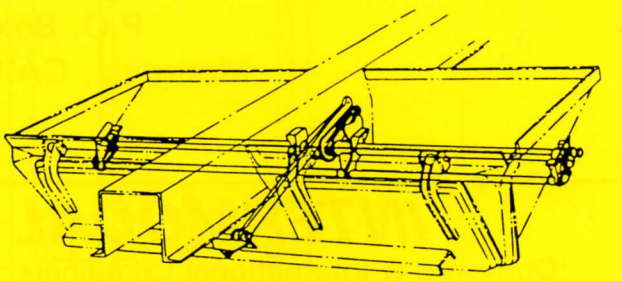

ENTERPRISE
TYPE "D" DOOR OPERATING MECHANISM
For open top hopper cars

(Above courtesy Rail Tex, Inc)

© Copyright 1993: Society of Freight Car Historians
FCJ53 / 0742-9355 / $14.95